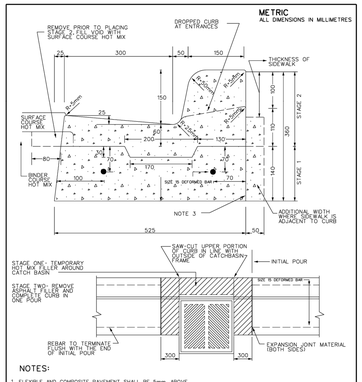

NOTES:

1. FLEXIBLE AND COMPOSITE PAVEMENT SHALL BE 5mm ABOVE THE ADJACENT EDGE OF GUTTER.
2. WHERE THE SIDEWALK IS CONTINUOUS TO THE CURB, AT DRIVEWAYS, THE CURB SHALL BE POURED WITH THE CONCRETE AT THE REAR OF THE CURB TO 150mm.
3. FOR SLIPFORMING PROCEDURE, A 5:1 BATTER IS ACCEPTABLE.
4. TREATMENT AT ENTRANCES SHALL CONFORM WITH OPSD-351.01.
5. OUTLET TREATMENT SHALL CONFORM WITH OPSD-610 SERES.
6. THE LENGTH OF TRANSITION FROM ONE CURB TYPE TO ANOTHER SHALL BE 1.20m EXCEPT IN CONJUNCTION WITH ROLL TERMINI SHALL CONFORM TO OPSD-800 SERIES.
7. ALL DIMENSIONS ARE IN MILLIMETERS UNLESS OTHERWISE STATED.
8. BASE COURSE HOT MIX MUST BE COMPACTED WITH HIGH PRESSURE JETS TO ENSURE A CLEAN SURFACE.
9. ALL CONCRETE, CSA, C-2, 32MPa.

MISSISSAUGA

STANDARD
CONCRETE BARRIER CURB
WITH STANDARD GUTTER
TWO STAGE CONSTRUCTION

EFF. DATE	2015-12-11	SCALE	N.T.S.
REV.	2016-09-21	STANDARD No.	2230.010

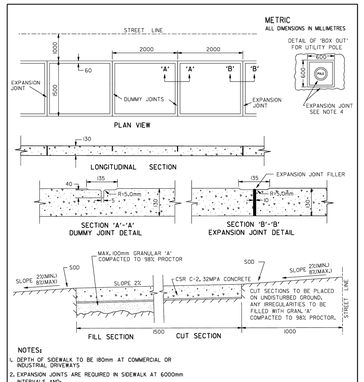

NOTES:

1. DEPTH OF SIDEWALK TO BE 80mm AT COMMERCIAL OR INDUSTRIAL DRIVEWAYS
2. EXPANSION JOINTS ARE REQUIRED IN SIDEWALK AT 6000mm INTERVALS AND:
   a) BETWEEN SIDEWALK AND ABUTTING CURB
   b) ADJACENT TO EXISTING STRUCTURES (WALKS, CURBS, UTILITY POLES, HYDRANTS, MANHOLES, ETC.) OR AT THE DISCRETION OF THE COMMISSIONER OF TRANSPORTATION AND WORKS.
3. DUMMY JOINTS SHALL HAVE STANDARD SPACING OF 2000mm AND WILL BE FORMED AFTER THE CONCRETE HAS RECEIVED ITS INITIAL SET
4. WHEN SIDEWALKS ARE ADJACENT TO CURBS, EXPANSION JOINTS SHALL CONCIDE WITH THE CURB EXPANSION JOINTS
5. FILL SECTIONS REQUIRING GREATER THAN 100mm TO BE FILLED WITH NATIVE MATERIAL COMPACTED TO 98% PROCTOR

MISSISSAUGA

STANDARD
CONCRETE SIDEWALK

EFF. DATE	2015-03-27	SCALE	N.T.S.
REV. 4	2015-03-27	STANDARD No.	2240.030

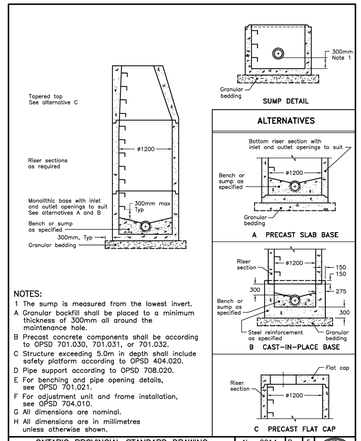

NOTES:

1 The sump is measured from the lowest invert.
A Granular backfill shall be placed to a minimum thickness of 300mm all around the maintenance hole.
B Precast concrete components shall be according to OPSD 701.030, 701.031, or 701.032.
C Structure exceeding 5.0m in depth shall include safety platform according to OPSD 404.020.
D Pipe support according to OPSD 708.020.
E For benching and pipe opening details, see OPSD 701.021.
F For adjustment unit and frame installation, see OPSD 704.010.
G All dimensions are nominal.
H All dimensions are in millimetres unless otherwise shown.

ONTARIO PROVINCIAL STANDARD DRAWING	Nov 2014	Rev 5

PRECAST CONCRETE
MAINTENANCE HOLE
1200mm DIAMETER

OPSD 701.010

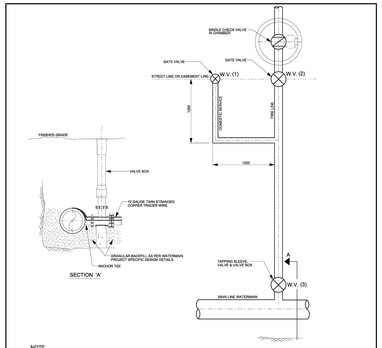

NOTE

1. STANDARD FOR SERVICE MORE THAN 5000mm IN LENGTH.
2. SERVICES LESS THAN 12000mm IN LENGTH MAIN VALVE (3) TO BE TIES TO THE TEE USING S.S. TIE RODS.
3. WHERE NO METALLIC PIPE IS USED, A 12 GAUGE TRACER WIRE TO BE INSTALLED WITH THE PIPE AND BE BROUGHT TO THE SURFACE AT ALL VALVE BOX BOXES.
4. BACKFILL TRENCH WITH GRANULAR 'M' COMPACTED TO 100% STD. PROCTOR DENSITY.
5. REFER TO O. REG. 350/06 - PART - PLUMBING SECTION 7.6.2.4 FOR TYPE OF BLACKFLOW PREVENTER REQUIRED.
6. ALL PIPING, FITTINGS, VALVES, APPURTENANCES AND MECHANICAL RESTRAINTS TO BE c/w DENSO PASTE, DENSO MASTIC AND DENSO TAPE OR APPROVED EQUAL, APPLIED TO MANUFACTURER'S RECOMMENDATIONS.

Region of Peel
Working for you

PUBLIC WORKS
STANDARD DRAWING

APPROVED BY: D.L.	DRAWN BY: ANLEY GROUP
STD. DWG. NUMBER: 1-6-4	SCALE: N.T.S.

REV. DATE: APRIL 2014

FIRE LINE AND DOMESTIC CONNECTION

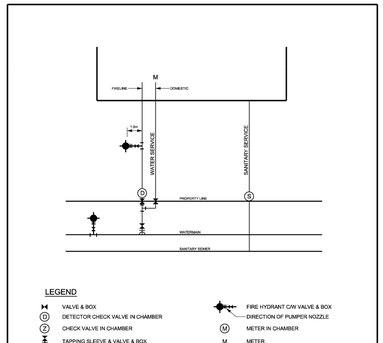

LEGEND

- VALVE & BOX
- DETECTOR CHECK VALVE IN CHAMBER
- CHECK VALVE IN CHAMBER
- TAPPING SLEEVE & VALVE & BOX
- TEE
- FIRE HYDRANT C/W VALVE & BOX
- DIRECTION OF PUMPER NOZZLE
- METER IN CHAMBER
- METER
- SAMPLING SANITARY MAINTENANCE HOLE

Region of Peel
Working for you

PUBLIC WORKS
STANDARD DRAWING

APPROVED BY: A.P.	DRAWN BY: ANLEY GROUP
STD. DWG. NUMBER: 1-8-3	SCALE: N.T.S.

REV. DATE: NOVEMBER 2011

SERVICING FOR APARTMENTS, BUILDINGS, SCHOOLS, HOSPITALS, HOTELS, MOTELS AND CHURCHES

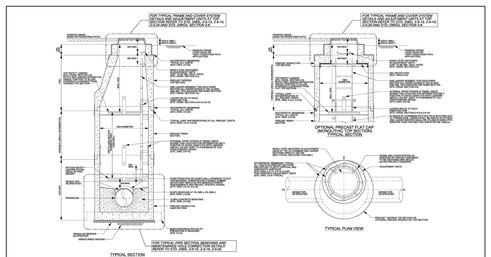

NOTE

1. REFER TO STANDARD DRAWING 2-5-1 FOR GENERAL NOTES PERTAINING TO PRECAST MAINTENANCE HOLES.
2. REFER TO STANDARD DRAWING 2-5-3 FOR TYPICAL INSTALLATION OPTIONS AND REQUIREMENTS.
3. FOR PIPE TO MAINTENANCE HOLE SIZING REFERENCE STD. DWG. 2-5-21.
4. FOR HOLE DEPTHS FROM BENCHWALL TO SUBGRADE REFER TO STANDARD DRAWING 2-5-1 FOR GENERAL NOTES PERTAINING TO MAINTENANCE HOLES.
5. FOR TAPERED TOP SECTIONS THE LADDER SHALL ALWAYS BE INSTALLED ON THE SIDE WITH VERTICAL WALL.

Region of Peel
working with you

PUBLIC WORKS
STANDARD DRAWING

REVISION NUMBER: 2	FOR REVISION TRACKING PURPOSES ONLY, SEE NOTE 2	
APPROVED BY: A.P.	DRAWN BY: ANLEY GROUP	
STD. DWG. NUMBER: 2-5-3	SCALE: N.T.S.	

REV. DATE: AUGUST 2020

NEW SANITARY SEWER CONSTRUCTION
TYPICAL 1200mm DIAMETER PRECAST CIRCULAR MAINTENANCE HOLE DETAILS

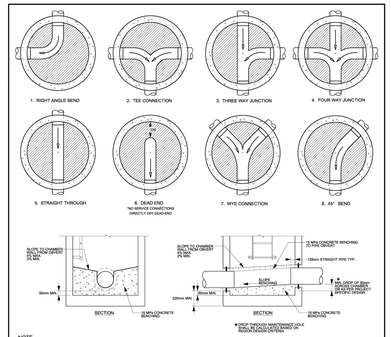

NOTE

1. CONCRETE TO BE 15 MPa COMPRESSIVE STRENGTH.
2. BENCHING TO BE GIVEN WOOD FLOAT FINISH, CHANNEL TO BE GIVEN STEEL TROWEL FINISH.
3. ALL PIPE PENETRATIONS MUST EXTEND INTERNALLY 125mm STRAIGHT INTO MAINTENANCE HOLE BEFORE CHANNEL CURVATURE BEGINS.
4. BENCHING TO BE CONSTRUCTED TO THE OBVERT OF THE PIPE.
5. FACTORY CAST PRE-BENCHING MAY BE USED WITHIN MONOLITHIC BASE SECTIONS.
6. FOR PIPE TO MAINTENANCE HOLE SIZING REFERENCE STD. DWG. 2-5-21.
7. REFER TO STANDARD DRAWING 2-5-1 FOR GENERAL NOTES PERTAINING TO PRECAST MAINTENANCE HOLES.
8. REFER TO STANDARD DRAWING 2-5-2 FOR TYPICAL INSTALLATION OPTIONS AND REQUIREMENTS.

Region of Peel
working with you

PUBLIC WORKS
STANDARD DRAWING

REVISION NUMBER: 2	FOR REVISION TRACKING PURPOSES ONLY, SEE NOTE 2
APPROVED BY: A.P.	DRAWN BY: ANLEY GROUP
STD. DWG. NUMBER: 2-5-20	SCALE: N.T.S.

REV. DATE: AUGUST 2020

NEW SANITARY SEWER CONSTRUCTION
MAINTENANCE HOLE BENCHING DETAILS

NOTES

Specifications for Tactile Walking Surface Indicators
City of Mississauga Detail Sheets

2240.033 - Signalized Intersection Configurations of Pedestrian Crossings
2240.034 - Controlled Non Signalized Intersection Configurations of Pedestrian Crossings
2240.035 - Tactile Walking Surface Indicator and Depressed Curb Detail
2240.036 - Tactile Walking Surface Indicator and Curb Ramp Detail
2240.037 - Location of Dropped Curbs at Controlled Intersections

Canadian Standards Association
CSA B651-2012 Accessible Design for the Built Environment

American Society of Testing and Materials
ASTM A 48 Standard Specification for Grey Iron Castings
ASTM C 1028 Standard Test Method for Determining the Static Coefficient of Friction of Ceramic Tile and Other like Surfaces by the Horizontal Dynamometer Pull-Meter Method
ASTM C 501-84 Standard Test Method for Relative Resistance to Wear of Unglazed Ceramic Tile by the Taber Abraser

Ontario Provincial Legislation
O.Reg. 191/11 Accessibility for Ontarians with Disabilities Act, 2005

MATERIALS
Tactile Walking Surface Indicators

Tactile walking surface indicators shall be according to drawing 2240.036 and Standard number TBD and be made of cast iron, according to CSA B651-2012 with the following amendment: minimum 52.39 millimeter centre to centre spacing of domes and follows Ontario Regulation 191/11, and meets the following requirements:

Standard	Property	Minimum Result
ASTM A 8	Tensile Strength	Class 30 B
ASTM C 1028	Slip Resistance	Dry 0.8 min, Wet 0.8 min
ASTM C 501-84	Wear Resistance	Wear Index: ≥15

The truncated domes shall be of uniform size and shape. Units shall be uniform in texture, be free from pouring faults, sponginess, cracks, blowholes, and other defects, and have clean-cut and well-defined edges. All surfaces shall be bare, without any coating, and be uniform and free of flaking rust or mounts of rust or debris.

CONSTRUCTION
Ramps
Sidewalk accessibility ramps shall be in according to 2240.033, 2240.034, 2240.035, 2240.036, and 2240.037 with tactile walking surface indicators and shall be incorporated at every location with a pedestrian crossing or as specified on the Contract Drawings.

Installation of Tactile Walking Indicators
Tactile walking surface indicators shall be set and pressed into wet concrete to final elevation according to manufacturer's recommendations. Remove any wet concrete that may spill onto tactile walking surface indicator surface. Radius plates to be used as required to follow curb radius. Straight Plates will be allowed on Radii upon approval by the City of Mississauga representative.

MISSISSAUGA

TACTILE WALKING SURFACE
INDICATOR-NOTES

EFF. DATE	DEC 2015	SCALE	N.T.S.
REV.		STANDARD No.	2240.038

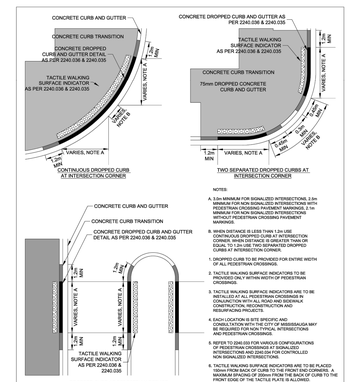

NOTES:

A. 3.0m MINIMUM FOR SIGNALIZED INTERSECTIONS, 2.0m MINIMUM FOR NON SIGNALIZED INTERSECTIONS WITH PEDESTRIAN CROSSING PAVEMENT MARKINGS, 2.1m MINIMUM FOR NON SIGNALIZED INTERSECTIONS WITHOUT PEDESTRIAN CROSSING PAVEMENT MARKINGS.
B. WHEN DISTANCE IS LESS THAN 1.2m USE CONTINUOUS DROPPED CURB AT INTERSECTION CORNER. WHEN DISTANCE IS GREATER THAN OR EQUAL TO 1.2m USE TWO SEPARATED DROPPED CURBS AT INTERSECTION CORNER.
1. DROPPED CURB TO BE PROVIDED FOR ENTIRE WIDTH OF ALL PEDESTRIAN CROSSINGS.
2. TACTILE WALKING SURFACE INDICATORS TO BE PROVIDED ONLY WITHIN WIDTH OF PEDESTRIAN CROSSINGS.
3. TACTILE WALKING SURFACE INDICATORS ARE TO BE INSTALLED AT ALL PEDESTRIAN CROSSINGS IN ACCORDANCE WITH CITY STANDARDS FOR NEW CONSTRUCTION, RECONSTRUCTION AND RESURFACING PROJECTS.
4. EACH LOCATION IS SITE SPECIFIC AND CONSULTATION WITH THE CITY OF MISSISSAUGA MAY BE REQUIRED FOR ALL CONTROLLED INTERSECTIONS AND PEDESTRIAN CROSSINGS.
5. REFER TO 2240.033 FOR VARIOUS CONFIGURATIONS OF PEDESTRIAN CROSSINGS AT SIGNALIZED INTERSECTIONS AND 2240.034 FOR CONTROLLED NON SIGNALIZED INTERSECTIONS.
6. TACTILE WALKING SURFACE INDICATORS ARE TO BE PLACED WITHIN THE LIMITS OF THE CURB RAMP AS SHOWN ON THE PLANS. A MINIMUM SPACING OF 100mm FROM THE BACK OF CURB TO THE FRONT EDGE OF THE TACTILE PLATE IS ALLOWED.

MISSISSAUGA

LOCATION OF DROPPED CURBS
AT CONTROLLED INTERSECTIONS

EFF. DATE	DEC 2015	SCALE	N.T.S.
REV.		STANDARD No.	2240.037

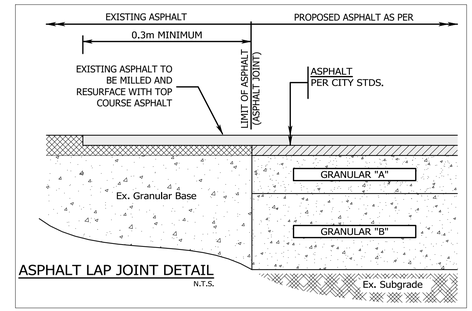

ASPHALT LAP JOINT DETAIL
N.T.S.

ISSUED FOR 3RD ZONING SUBMISSION	ISSUED FOR OPA & REZONING SUBMISSION	REVISED GRADING	4TH ROUND OPA & REZONING
DATE APR. 19, 2023	DATE AUG. 02, 2023	DATE JAN. 19, 2024	DATE JUN. 19, 2024

REGISTERED PROFESSIONAL ENGINEER
R.B.T. MERWIN
100009772
JUN. 19, 2024
PROVINCE OF ONTARIO

URBANTECH®
Urbantech® Consulting
A Division of Leighton-Zec West Ltd.
2030 Bristol Circle, Suite 105
Oakville, ON. L6H 0H2
TEL 905.829.8818 • urbantech.com

10 WEST GO GP INC.

17 & 19 ANN STREET, 84 & 90 HIGH STREET
OZ OPA 22-3

Region of Peel
working with you

MISSISSAUGA

DETAILS

REGION FILE No. XXX		CITY FILE No. XXX	
SCALE: 1:250	AREA Z-08-C5/D	PROJECT No.	19-241
DRAWN BY: A.G.	CHECKED BY: R.M./R.B.T.M	PLAN No.	701
DATE: APRIL 2023	SHEET OF	C-	

File: F:\PROJECTS\19-241 (ANN & HIGH STREET)\03_DRAWINGS\700 - STANDARD DETAILS\701-DETAILS.DWG

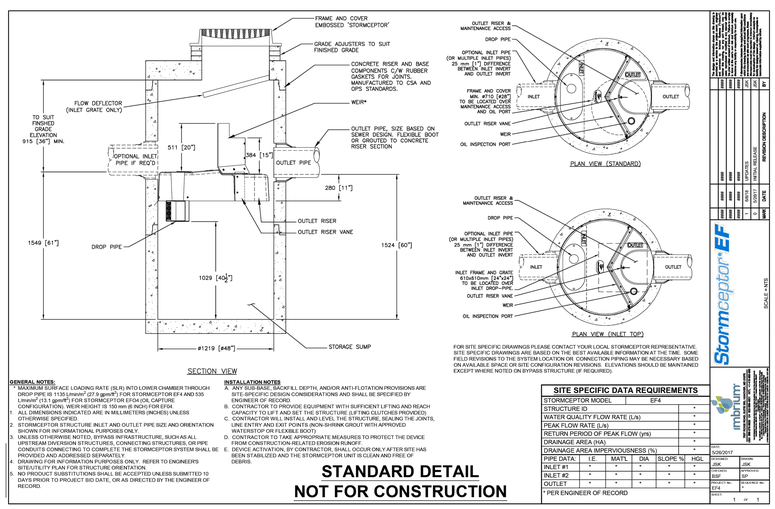

GENERAL NOTES:

1. MAXIMUM SURFACE LOADING RATE (SLR) INTO LOWER CHAMBER THROUGH DROP PIPE IS 1135 L/min/m² (27.9 gpm/ft²) FOR STORMCEPTOR EF4 AND 535 L/min/m² (13.1 gpm/ft²) FOR STORMCEPTOR EF04 (OIL CAPTURE CONFIGURATION). WEIR HEIGHT IS 150 mm (6 INCH) FOR EF04.
1. ALL DIMENSIONS INDICATED ARE IN MILLIMETERS (INCHES) UNLESS OTHERWISE SPECIFIED.
2. ALL PIPE SIZES, CONFIGURE INLET AND OUTLET PIPE SIZE AND ORIENTATION SHOWN FOR INFORMATIONAL PURPOSES ONLY.
3. UNLESS OTHERWISE NOTED, BYPASS INFRASTRUCTURE, SUCH AS ALL UPSTREAM DIVERSION STRUCTURES, CONNECTING STRUCTURES, OR PIPE CONDUITS CONNECTING TO COMPLETE THE STORMCEPTOR SYSTEM SHALL BE PROVIDED AND ADDRESSED SEPARATELY.
4. DRAWING FOR INFORMATION PURPOSES ONLY. REFER TO ENGINEER'S SITE/UTILITY PLAN FOR STRUCTURE ORIENTATION.
5. NO PRODUCT SUBSTITUTIONS SHALL BE ACCEPTED UNLESS SUBMITTED 10 DAYS PRIOR TO PROJECT BID DATE, OR AS DIRECTED BY THE ENGINEER OF RECORD.

INSTALLATION NOTES

A. ANY SUB-BASE, BACKFILL DEPTH, AND/OR ANTI-FLOTATION PROVISIONS ARE SITE-SPECIFIC DESIGN CONSIDERATIONS AND SHALL BE SPECIFIED BY ENGINEER OF RECORD.
B. CONTRACTOR TO PROVIDE EQUIPMENT WITH SUFFICIENT LIFTING AND REACH CAPACITY TO LIFT AND SET THE STRUCTURE (LIFTING CLUTCHES PROVIDED).
C. CONTRACTOR WILL INSTALL AND LEVEL THE STRUCTURE, SEALING THE JOINTS, AND BACKFILL AS SPECIFIED BY ENGINEER (NON-SHRINK GROUT WITH APPROVED WATERSTOP OR FLEXIBLE BOOT).
D. CONTRACTOR TO TAKE APPROPRIATE MEASURES TO PROTECT THE DEVICE FROM CONSTRUCTION-RELATED EROSION RUNOFF.
E. DEVICE ACTIVATION, BY CONTRACTOR, SHALL OCCUR ONLY AFTER SITE HAS BEEN STABILIZED AND THE STORMCEPTOR UNIT IS CLEAN AND FREE OF DEBRIS.

STANDARD DETAIL
NOT FOR CONSTRUCTION

SITE SPECIFIC DATA REQUIREMENTS

STORMCEPTOR MODEL	EF4	
STRUCTURE ID		*
WATER QUALITY FLOW RATE (L/s)		*
PEAK FLOW RATE (L/s)		*
RETURN PERIOD OF PEAK FLOW (yrs)		*
DRAINAGE AREA (HA)		*
DRAINAGE AREA IMPERVIOUSNESS (%)		*

PIPE DATA	I.E.	MATL	DIA	SLOPE %	HGL
INLET #1	*	*	*	*	*
INLET #2	*	*	*	*	*
OUTLET	*	*	*	*	*

* PER ENGINEER OF RECORD

REV.	DATE	REVISION DESCRIPTION
1	2016-09-21	UPDATED STANDARD DETAIL
0	2016-08-08	ISSUED FOR REVIEW

Stormceptor® EF

SCALE: N.T.S.

mbrium

DATE: 10/06/2017	
DESIGNED: JDK	DRAWN: JDK
CHECKED: BBF	APPROVED: BP
PROJECT No.: EF4	STANDARD No.:
SHEET: 1	OF 1

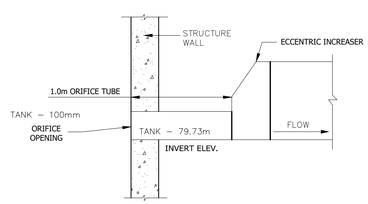

ORIFICE TUBE DETAIL
N.T.S.

PLOT DATE:June 27, 2024 3:06:55 PM